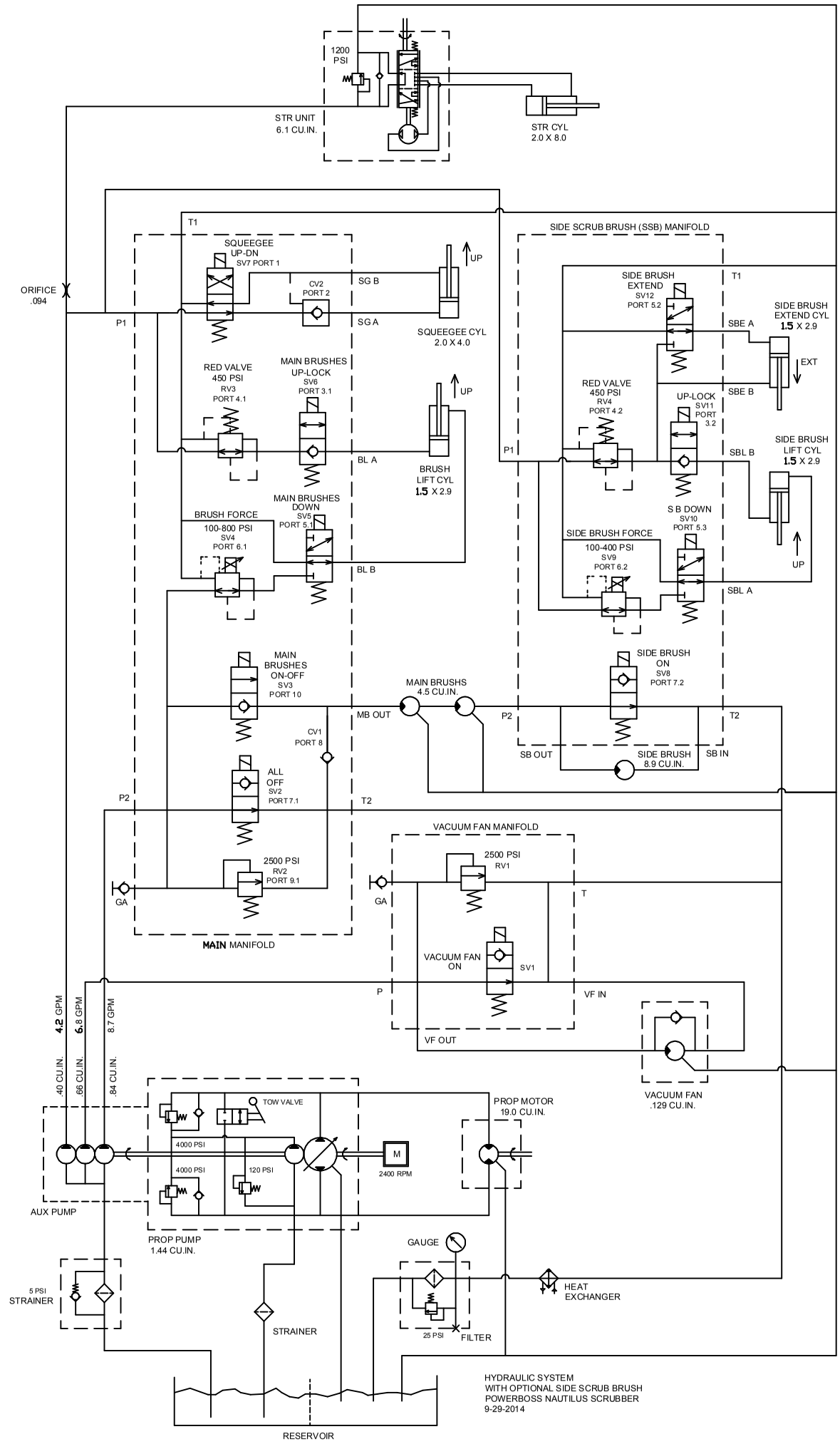

HYDRAULIC SYSTEM
WITH OPTIONAL SIDE SCRUB BRUSH
POWERBOSS NAUTILUS SCRUBBER
9-29-2014